CHANNEL 1

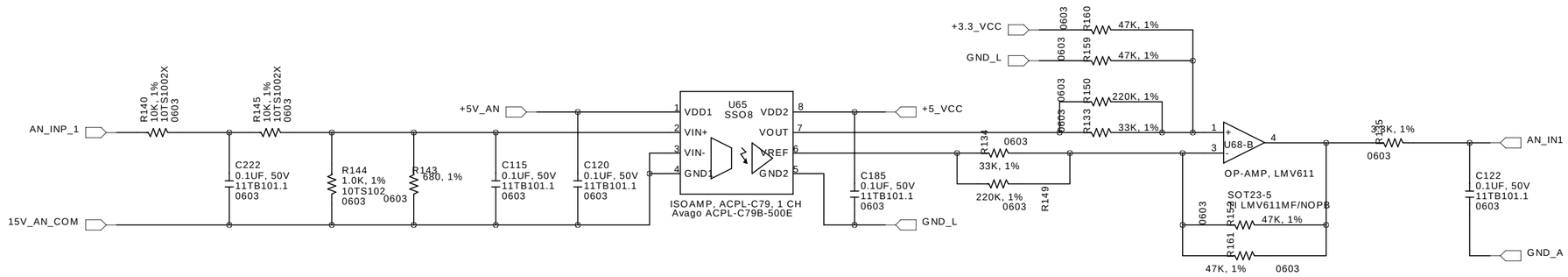

CHANNEL 2

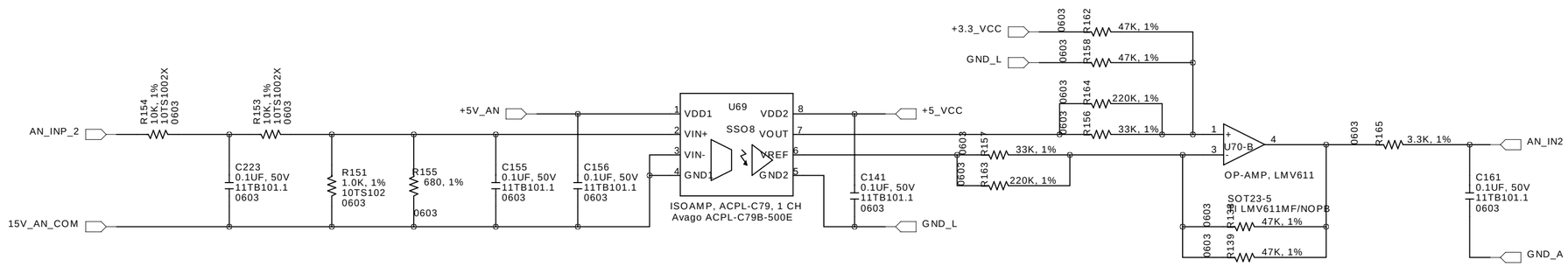

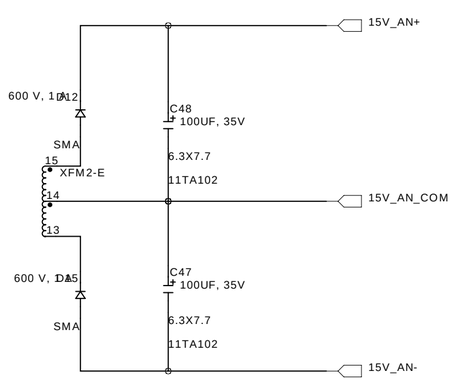

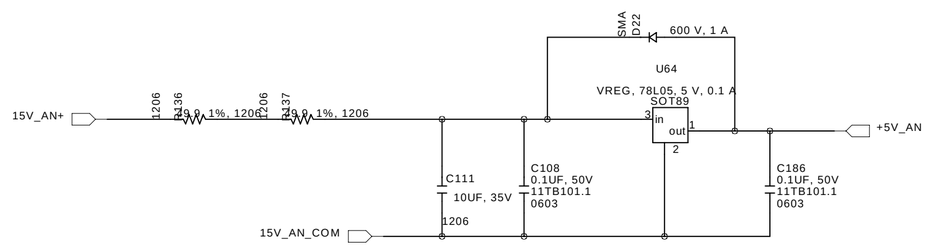

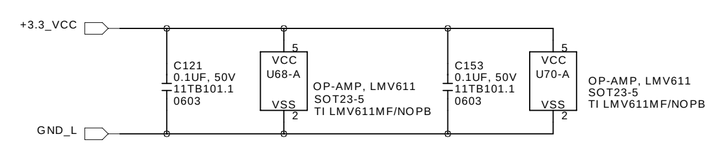

Power Electronics International, Inc.
561-8 PLATE DR., EAST DUNDEE, IL 60118 U.S.A.
PH: 1-847-428-9494 FAX: 1-847-428-7744
www.PEInfo.com

Copyright 2022

PE_dwg_name: 17E109.22_2023.01.27
File name: 17E109.22_2023.02.01.sch
Sheet name: ANALOG_INPUT
Size: C
Sheet: 1 of 18

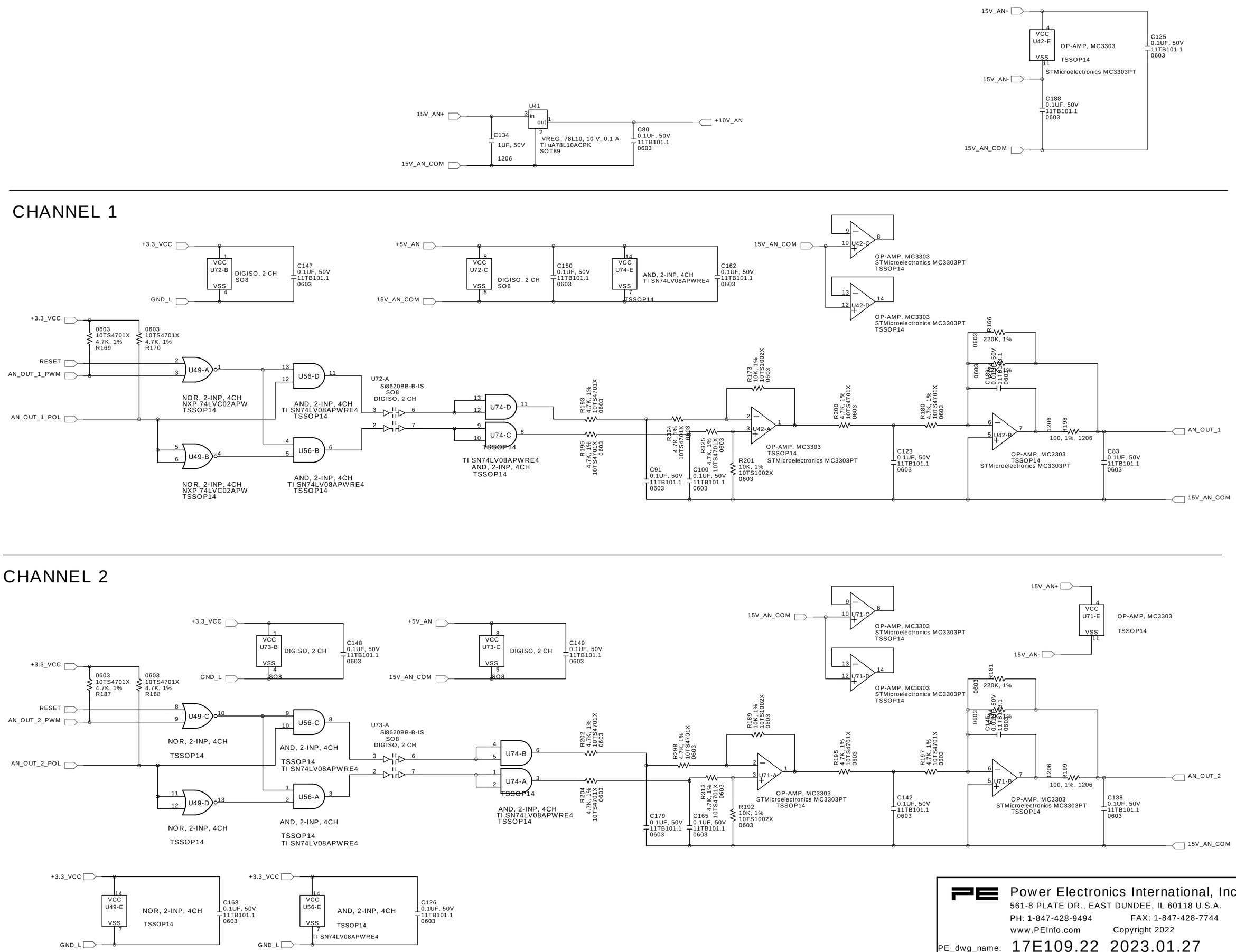

Power Electronics International, Inc.
561-8 PLATE DR., EAST DUNDEE, IL 60118 U.S.A.
PH: 1-847-428-9494 FAX: 1-847-428-7744
www.PEInfo.com

Copyright 2022

PE_dwg_name: 17E109.22_2023.01.27

File name: 17E109.22_2023.02.01.sch

Sheet name: ANALOG_OUTPUT

Size: C

Sheet: 2 of 18

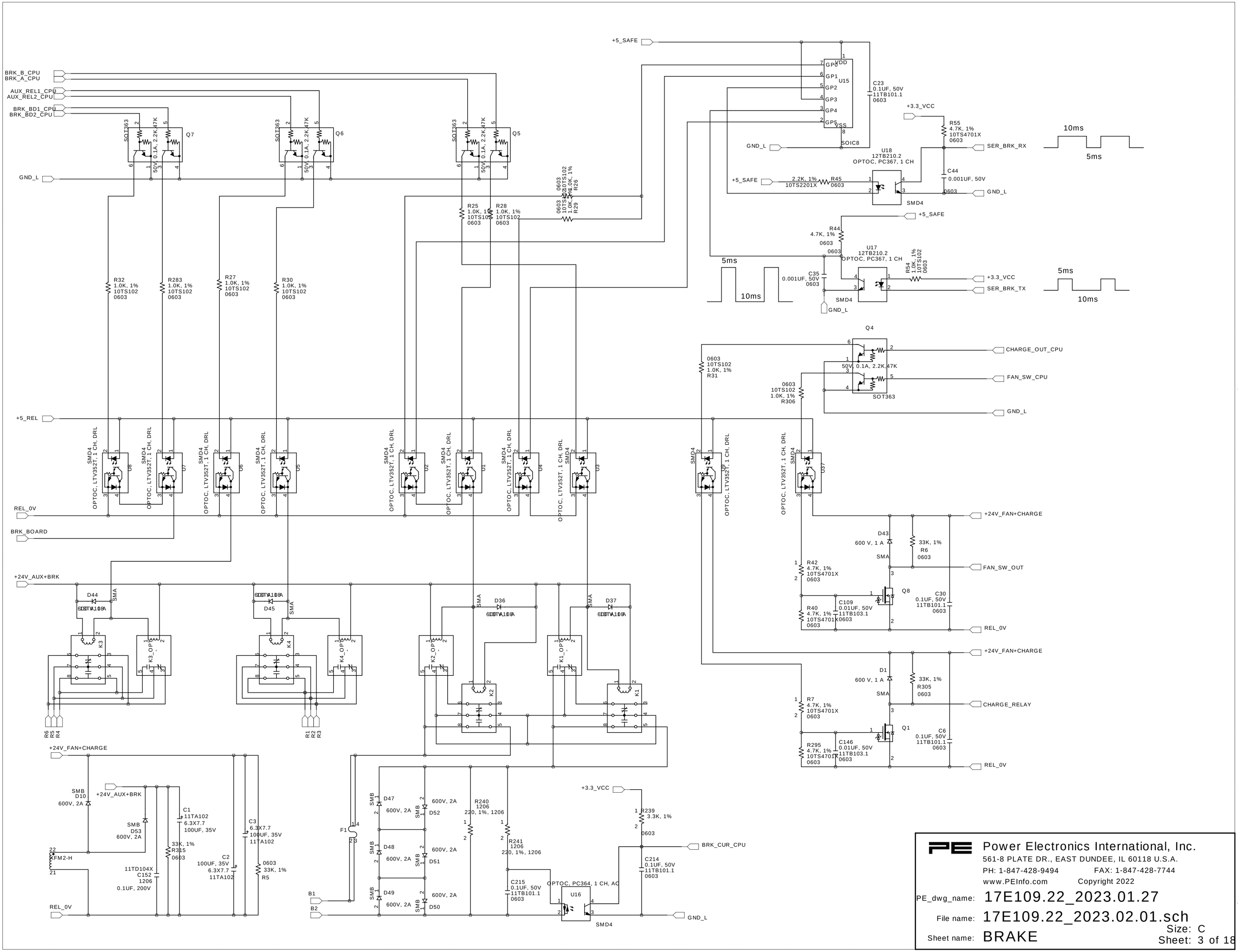

Power Electronics International, Inc.
561-8 PLATE DR., EAST DUNDEE, IL 60118 U.S.A.
PH: 1-847-428-9494 FAX: 1-847-428-7744
www.PEInfo.com Copyright 2022

PE_dwg_name: 17E109.22_2023.01.27

File name: 17E109.22_2023.02.01.sch

Sheet name: BRAKE

Size: C

Sheet: 3 of 18

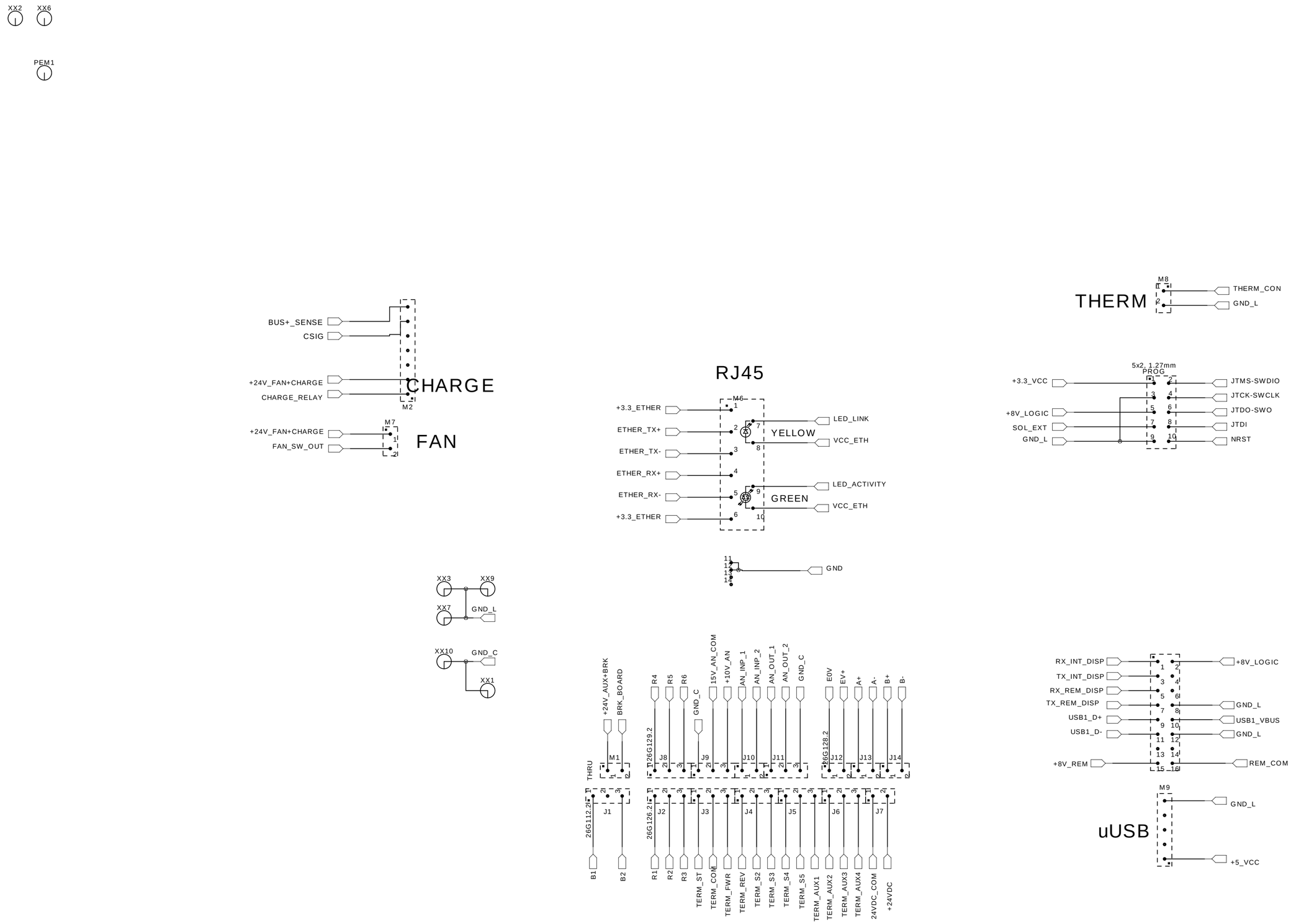

Power Electronics International, Inc.
561-8 PLATE DR., EAST DUNDEE, IL 60118 U.S.A.
PH: 1-847-428-9494 FAX: 1-847-428-7744
www.PEInfo.com Copyright 2022

PE_dwg_name: 17E109.22_2023.01.27

File name: 17E109.22_2023.02.01.sch

Sheet name: CONNECTORS

Size: C

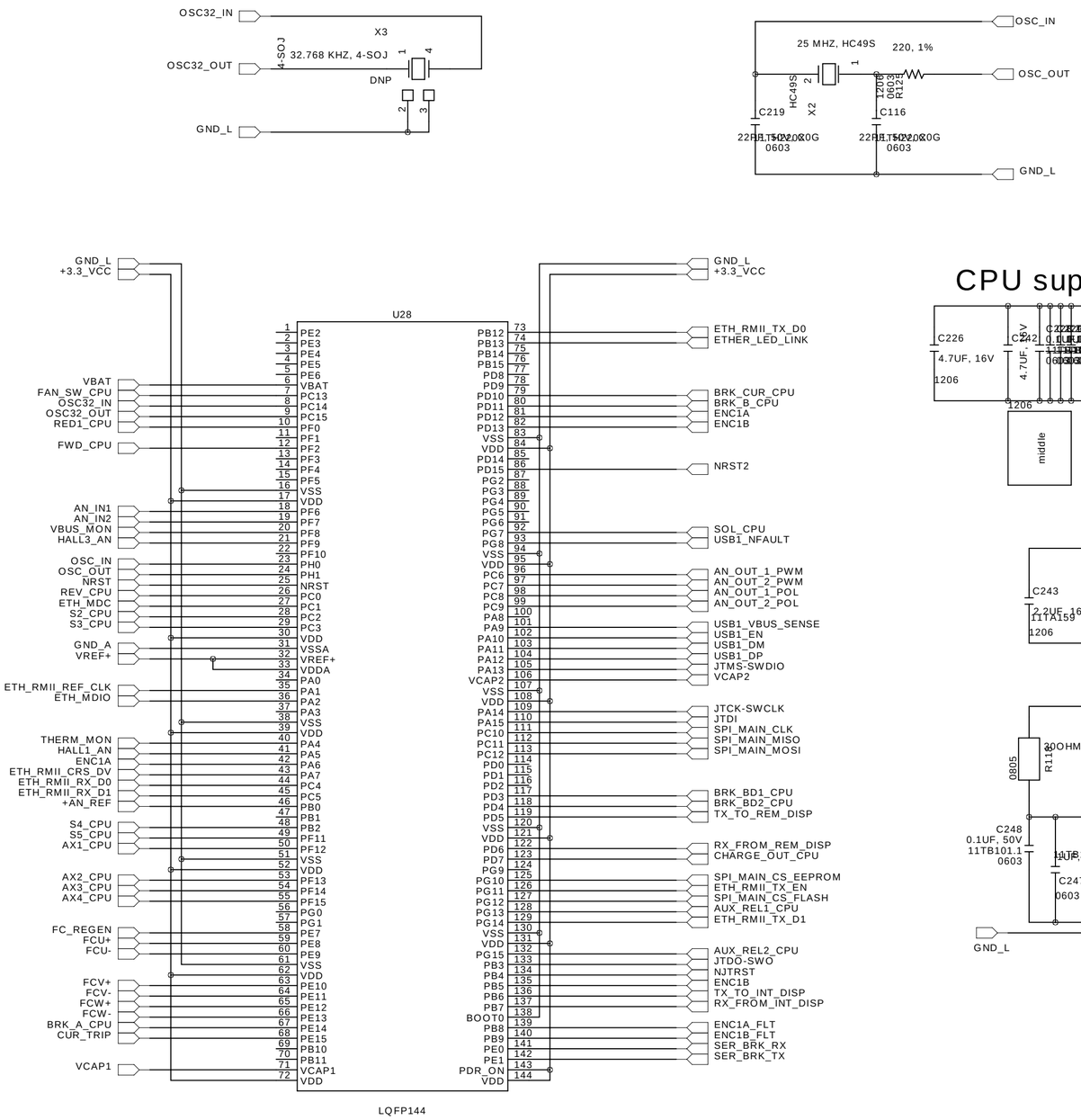

CPU supply bypass

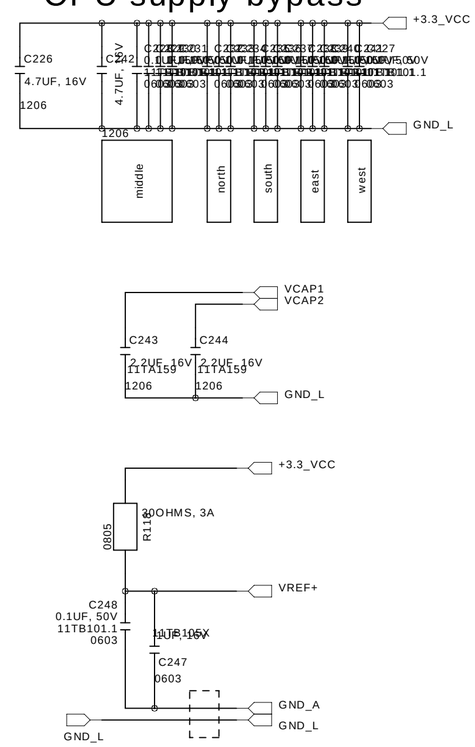

Power Electronics International, Inc.
561-8 PLATE DR., EAST DUNDEE, IL 60118 U.S.A.
PH: 1-847-428-9494 FAX: 1-847-428-7744
www.PEInfo.com
Copyright 2022

PE_dwg_name: 17E109.22_2023.01.27
File name: 17E109.22_2023.02.01.sch
Sheet name: CPU
Size: C
Sheet: 5 of 18

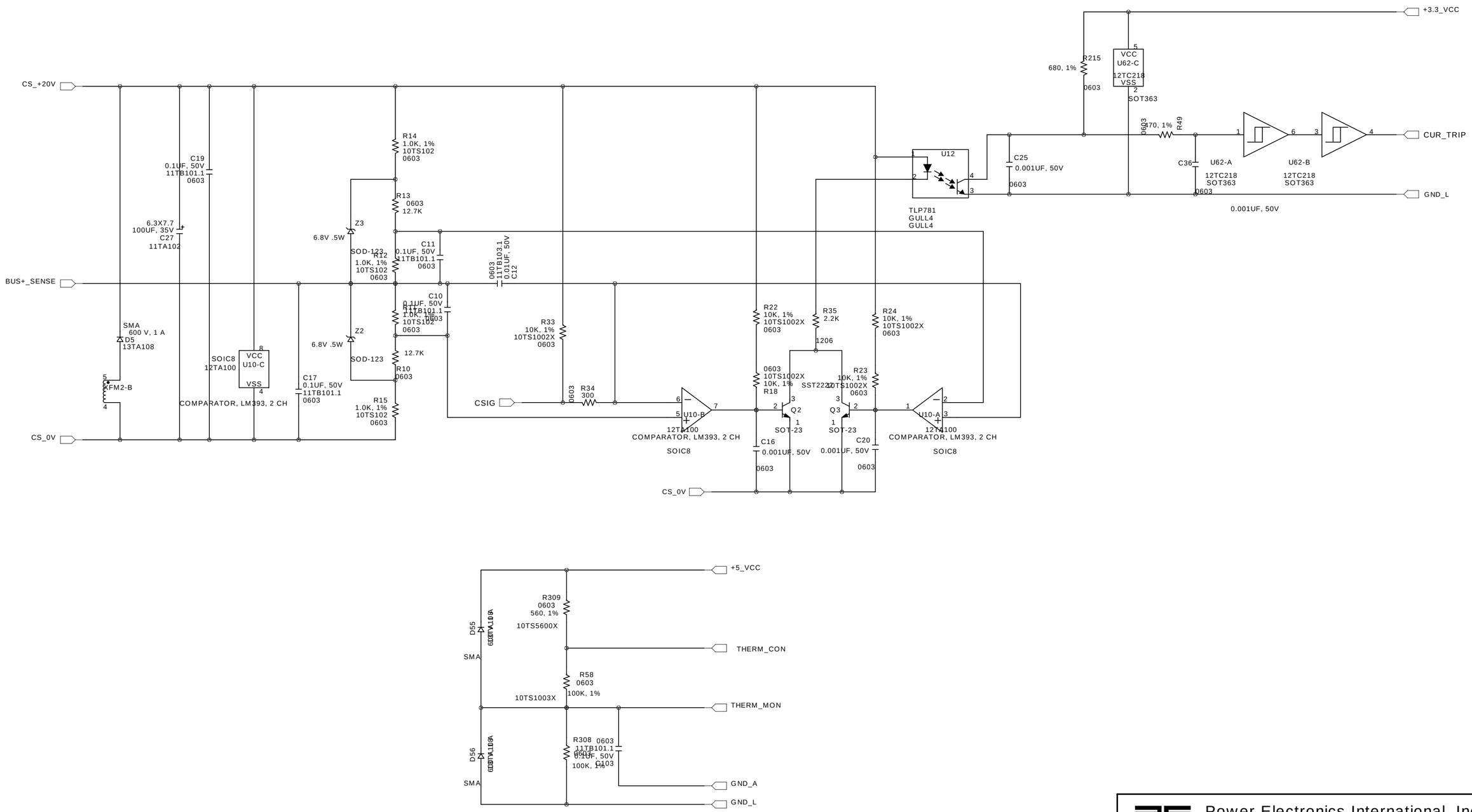

Power Electronics International, Inc.
561-8 PLATE DR., EAST DUNDEE, IL 60118 U.S.A.
PH: 1-847-428-9494 FAX: 1-847-428-7744
www.PEInfo.com
Copyright 2022

PE_dwg_name: 17E109.22_2023.01.27

File name: 17E109.22_2023.02.01.sch

Sheet name: CURRENT_TRIP

Size: C

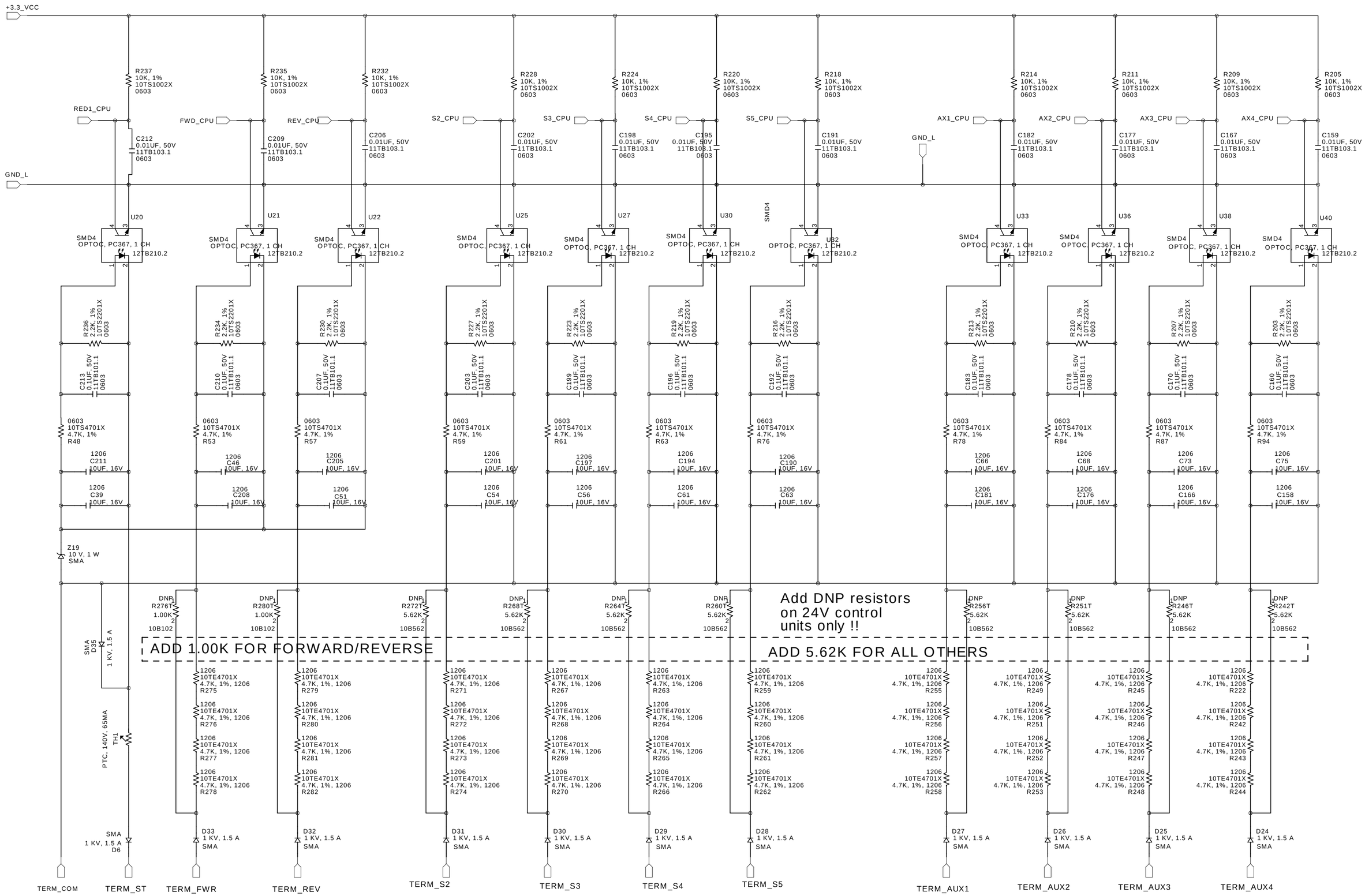

Power Electronics International, Inc.
561-8 PLATE DR., EAST DUNDEE, IL 60118 U.S.A.
PH: 1-847-428-9494 FAX: 1-847-428-7744
www.PEInfo.com

Copyright 2022

PE_dwg_name: 17E109.22_2023.01.27

File name: 17E109.22_2023.02.01.sch

Sheet name: DIGITAL_INPUT

Size: C

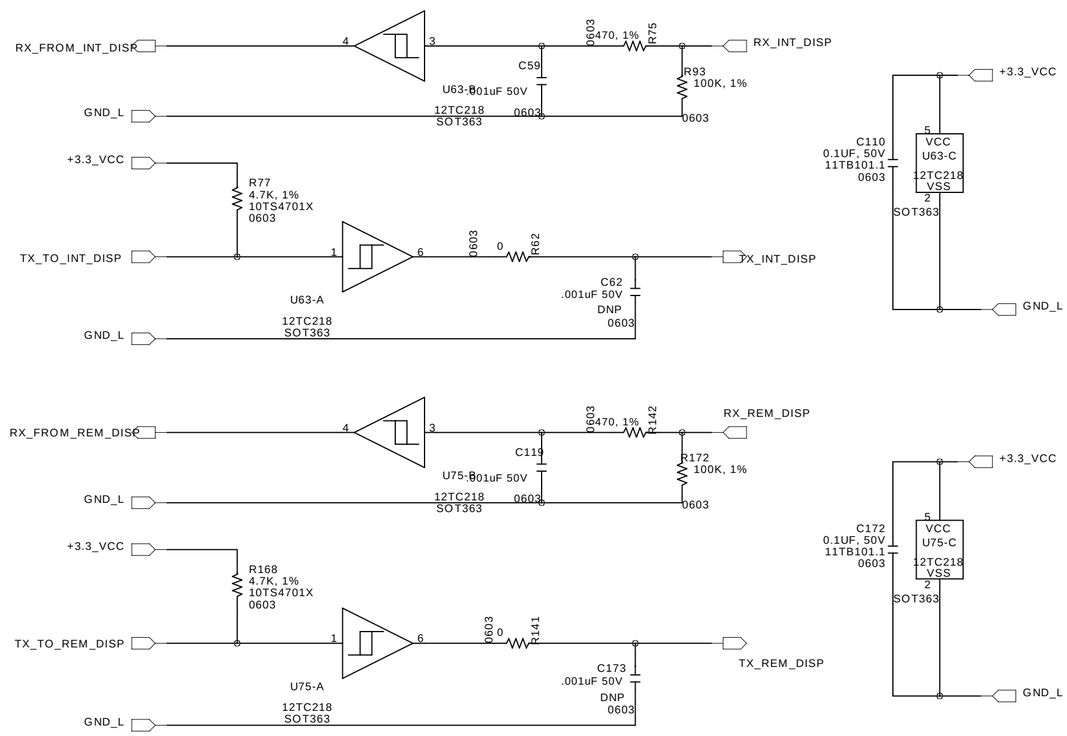

Power Electronics International, Inc.
561-8 PLATE DR., EAST DUNDEE, IL 60118 U.S.A.
PH: 1-847-428-9494 FAX: 1-847-428-7744
www.PEInfo.com Copyright 2022

PE_dwg_name: 17E109.22_2023.01.27

File name: 17E109.22_2023.02.01.sch

Sheet name: DISPLAY_INTERFACE

Size: C

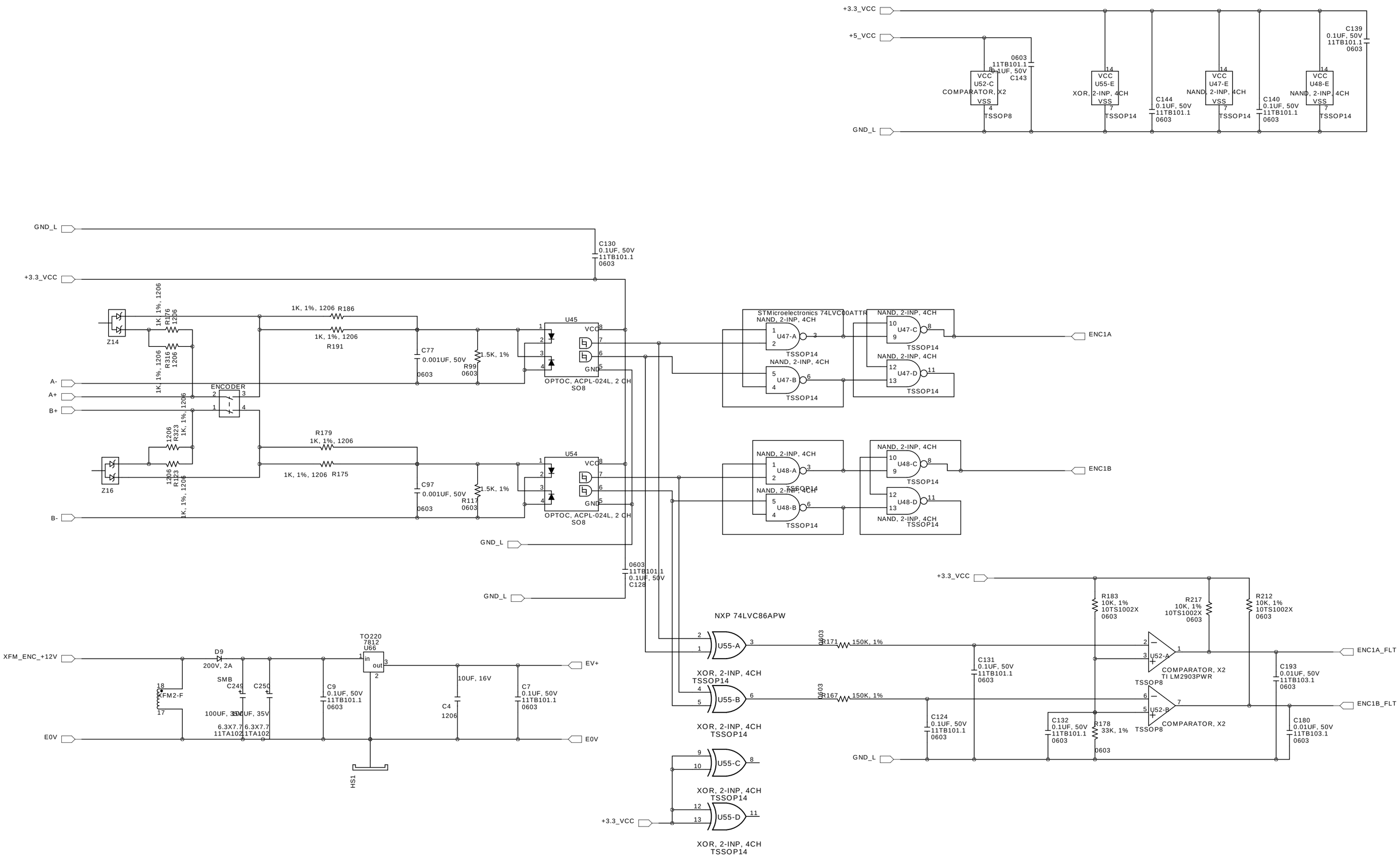

Power Electronics International, Inc.
561-8 PLATE DR., EAST DUNDEE, IL 60118 U.S.A.
PH: 1-847-428-9494 FAX: 1-847-428-7744
www.PEInfo.com Copyright 2022

PE_dwg_name: 17E109.22_2023.01.27
File name: 17E109.22_2023.02.01.sch
Sheet name: ENCODER
Size: C
Sheet: 9 of 18

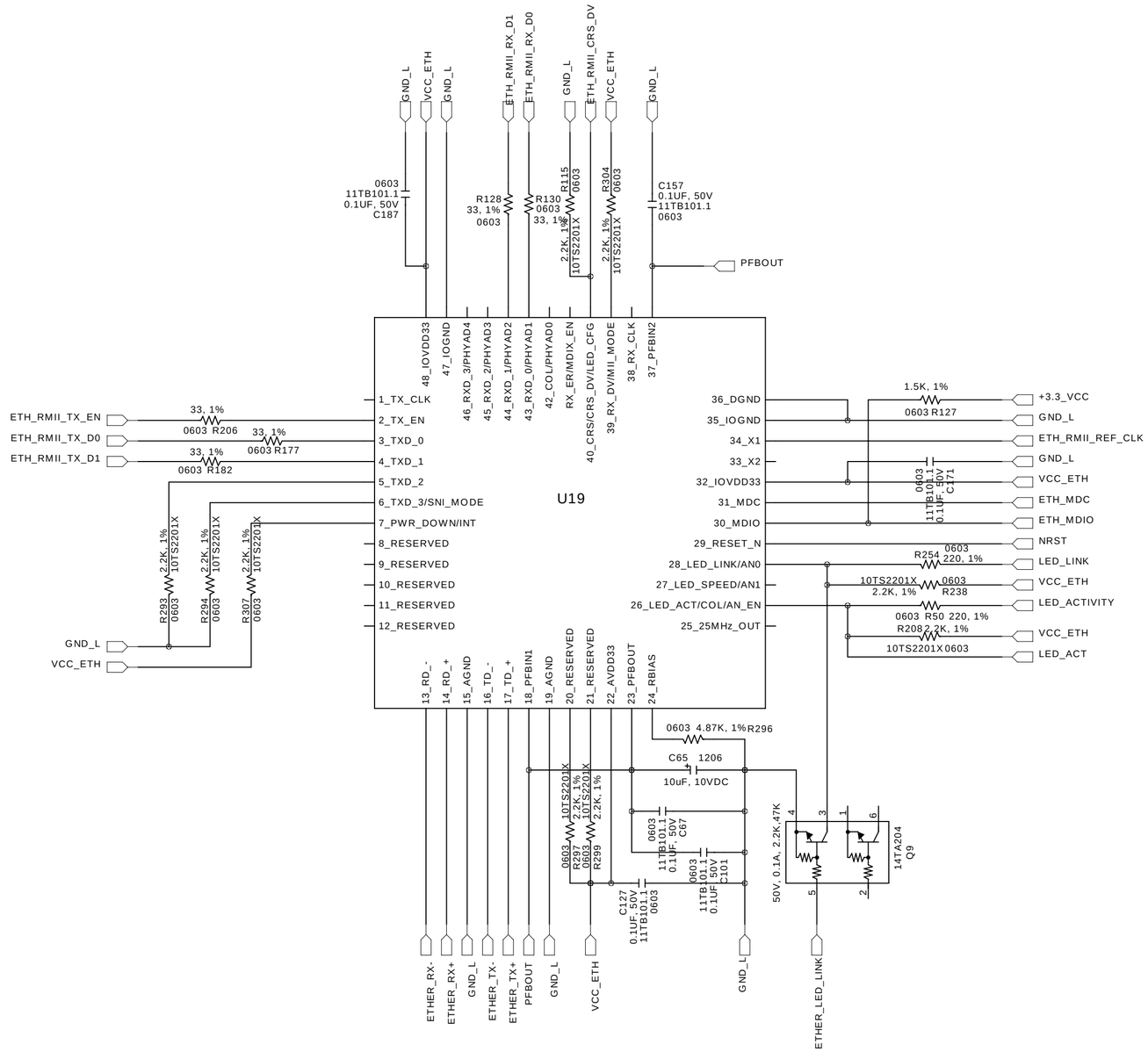

Place resistors and caps close to XCVR.

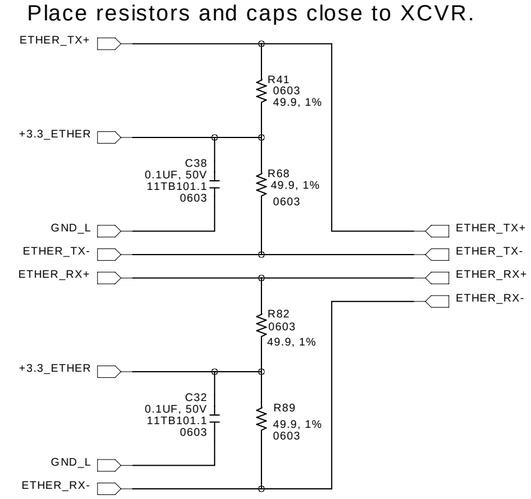

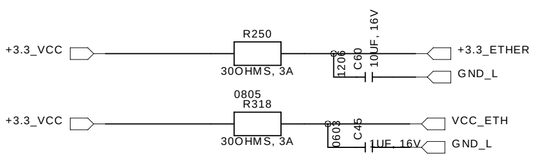

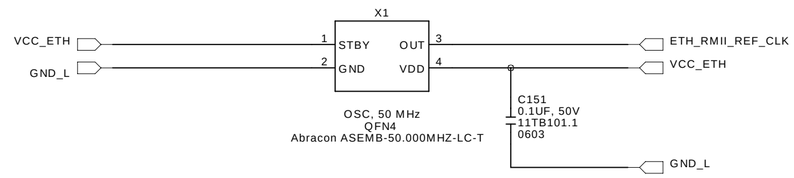

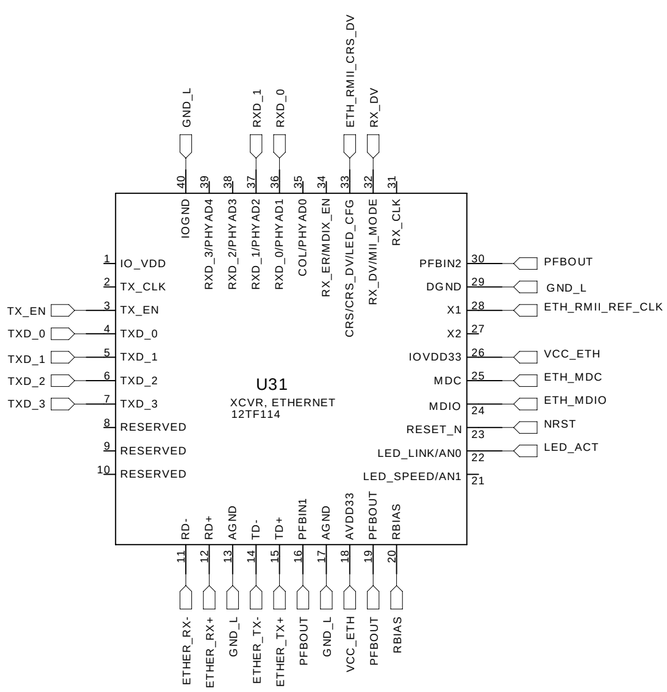

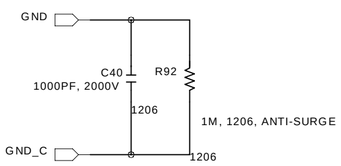

Power Electronics International, Inc.
561-8 PLATE DR., EAST DUNDEE, IL 60118 U.S.A.
PH: 1-847-428-9494 FAX: 1-847-428-7744
www.PEInfo.com
Copyright 2022

PE_dwg_name: 17E109.22_2023.01.27

File name: 17E109.22_2023.02.01.sch

Sheet name: ETHERNET

Size: C

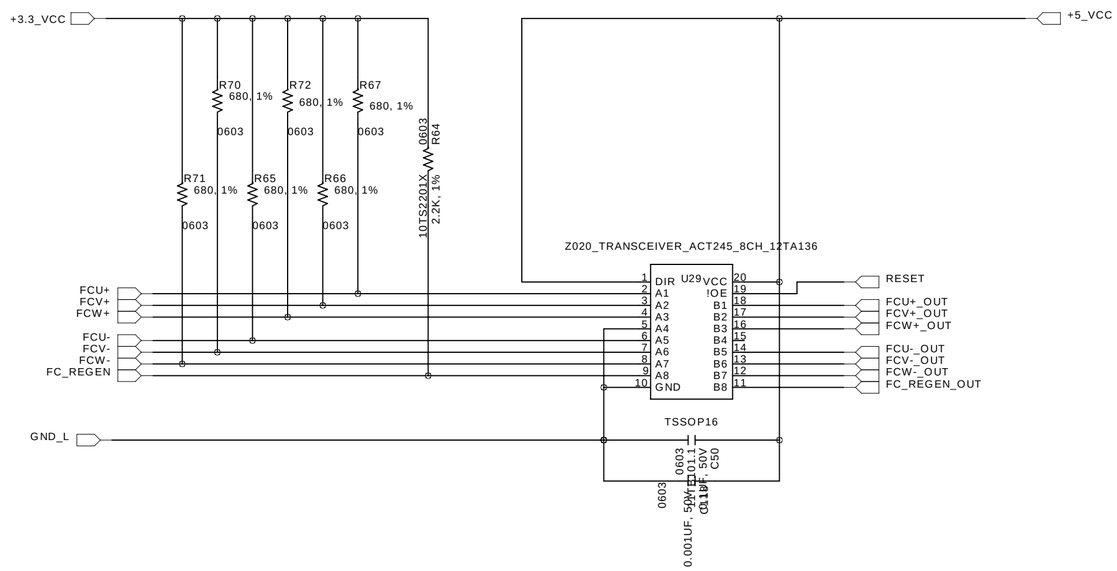

Power Electronics International, Inc.
561-8 PLATE DR., EAST DUNDEE, IL 60118 U.S.A.
PH: 1-847-428-9494 FAX: 1-847-428-7744
www.PEInfo.com Copyright 2022

PE_dwg_name: 17E109.22_2023.01.27

File name: 17E109.22_2023.02.01.sch

Sheet name: FC_DRIVERS

Size: C

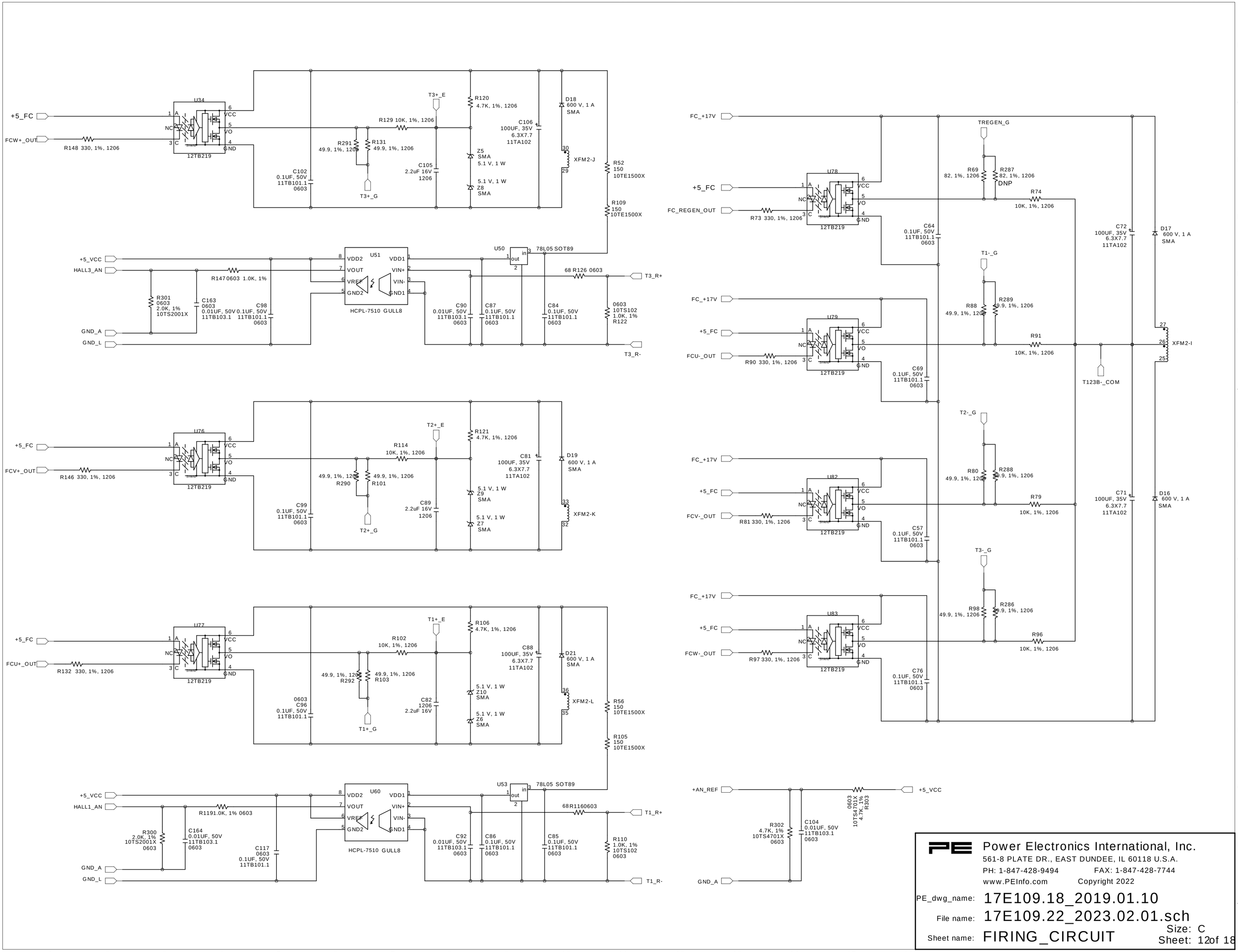

Power Electronics International, Inc.
561-8 PLATE DR., EAST DUNDEE, IL 60118 U.S.A.
PH: 1-847-428-9494 FAX: 1-847-428-7744
www.PEInfo.com Copyright 2022

PE_dwg_name: 17E109.18_2019.01.10
File name: 17E109.22_2023.02.01.sch
Sheet name: FIRING_CIRCUIT
Size: C
Sheet: 12of 18

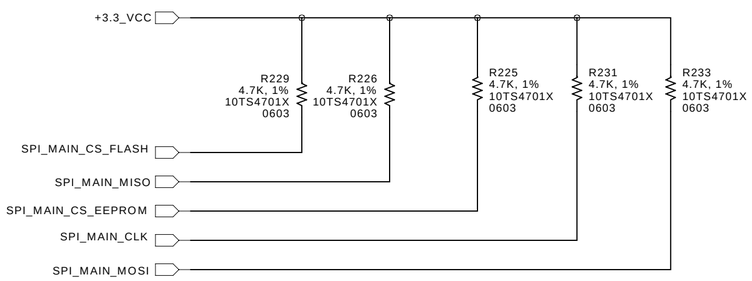

EEPROM memory

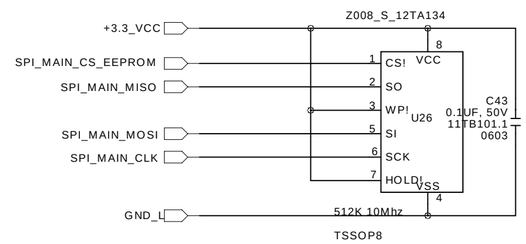

Flash memory

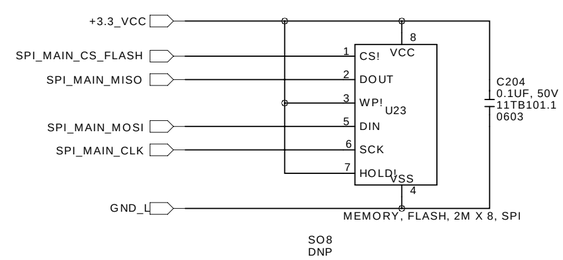

Power Electronics International, Inc.
561-8 PLATE DR., EAST DUNDEE, IL 60118 U.S.A.
PH: 1-847-428-9494 FAX: 1-847-428-7744
www.PEInfo.com Copyright 2022

PE_dwg_name: 17E109.22_2023.01.27

File name: 17E109.22_2023.02.01.sch

Sheet name: MEMORY

Size: C

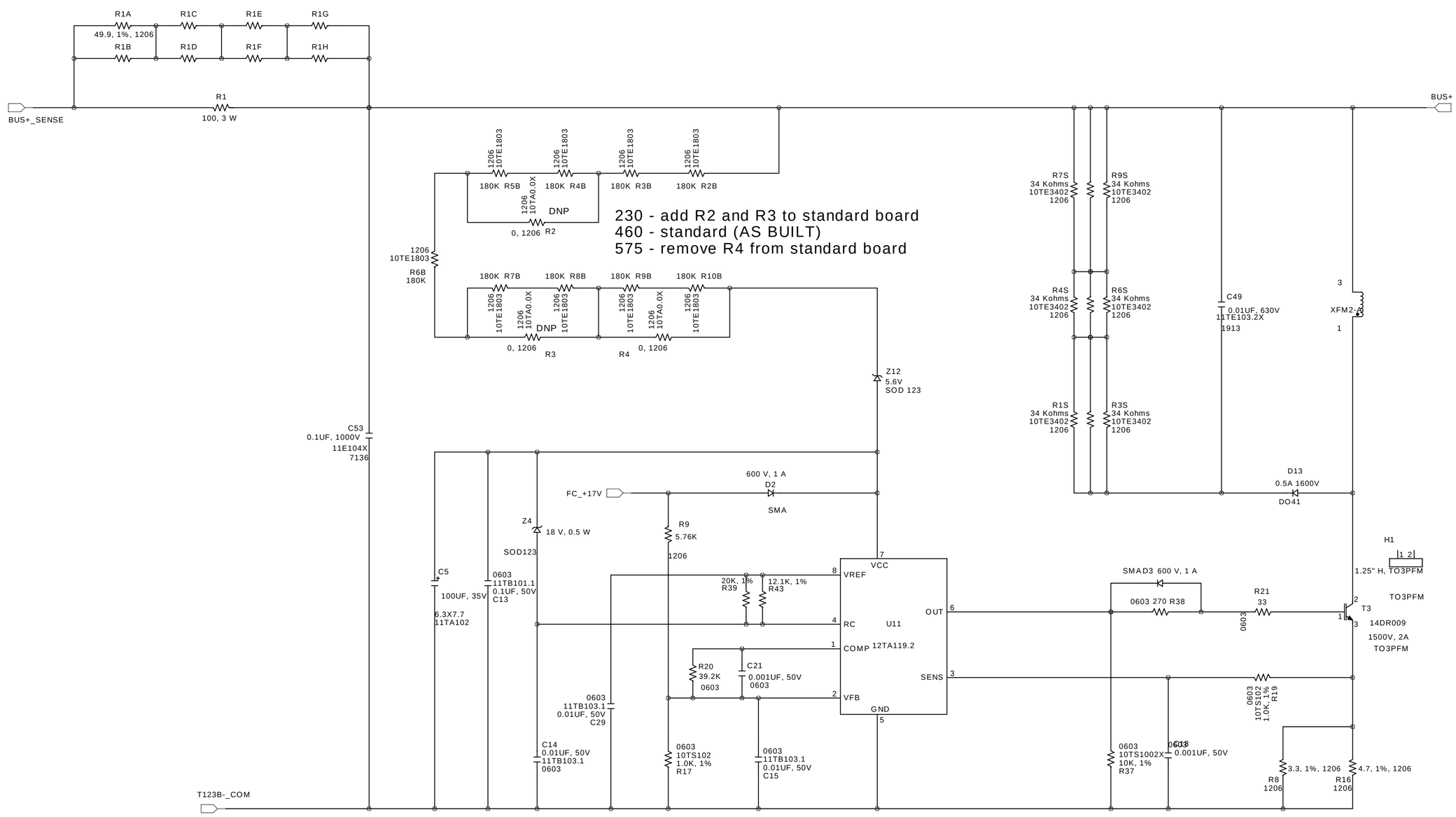

Power Electronics International, Inc.
561-8 PLATE DR., EAST DUNDEE, IL 60118 U.S.A.
PH: 1-847-428-9494 FAX: 1-847-428-7744
www.PEInfo.com Copyright 2022

PE_dwg_name: 17E109.22_2023.01.27
File name: 17E109.22_2023.02.01.sch
Sheet name: POWER_SUPPLY_HV
Size: C
Sheet: 14of 18

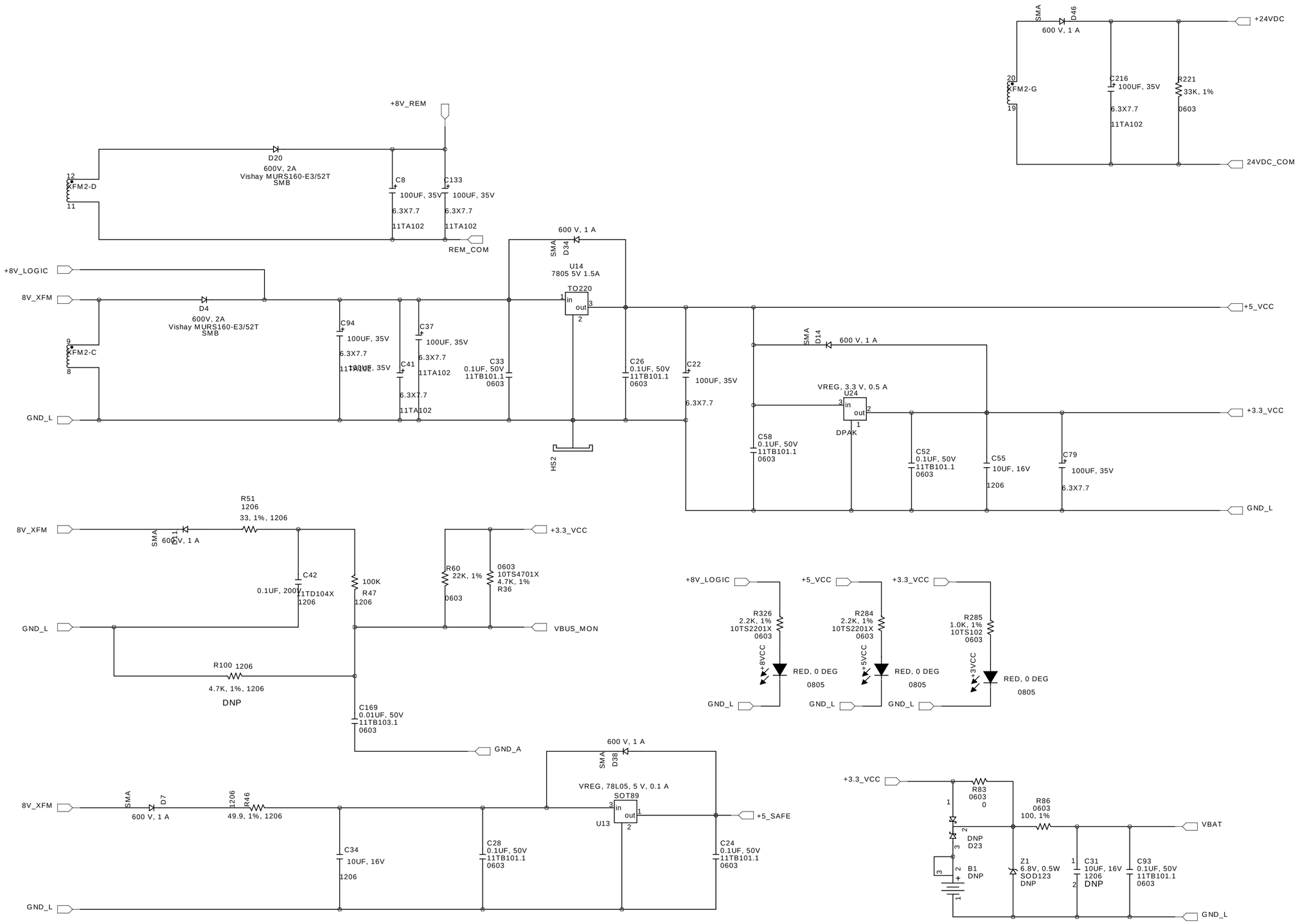

Power Electronics International, Inc.
561-8 PLATE DR., EAST DUNDEE, IL 60118 U.S.A.
PH: 1-847-428-9494 FAX: 1-847-428-7744
www.PEInfo.com

Copyright 2022

PE_dwg_name: 17E109.22_2023.01.27

File name: 17E109.22_2023.02.01.sch

Sheet name: POWER_SUPPLY_LV

Size: C

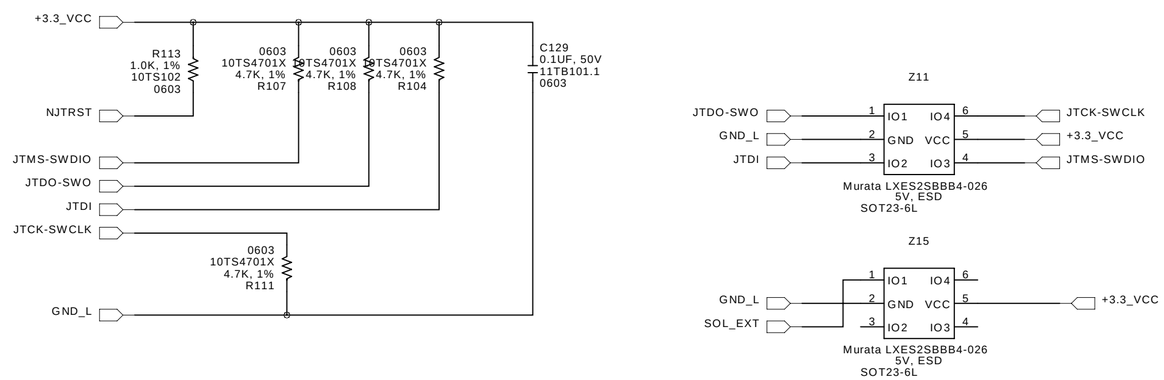

Power Electronics International, Inc.
561-8 PLATE DR., EAST DUNDEE, IL 60118 U.S.A.
PH: 1-847-428-9494 FAX: 1-847-428-7744
www.PEInfo.com Copyright 2022

PE_dwg_name: 17E109.22_2023.01.27

File name: 17E109.22_2023.02.01.sch

Sheet name: PROGRAMMING

Size: C

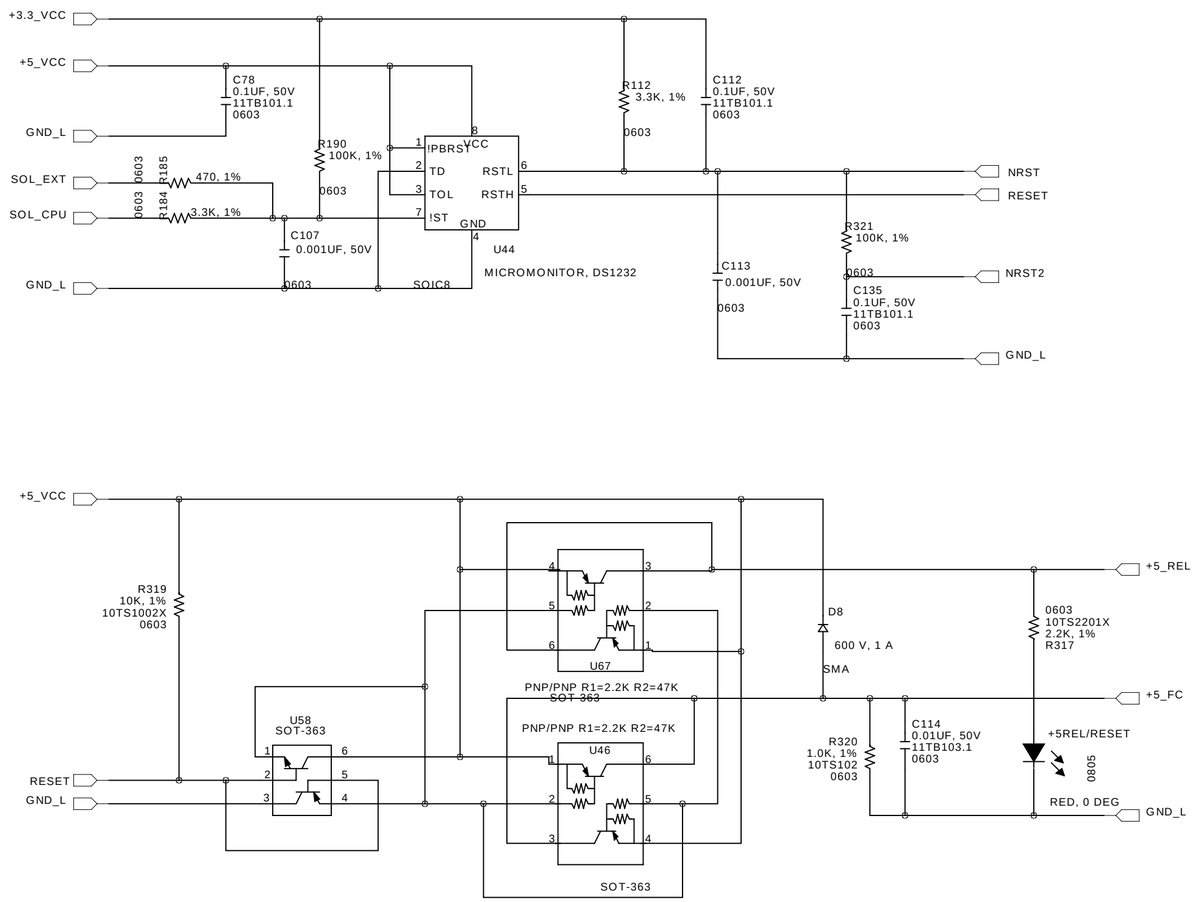

Power Electronics International, Inc.
561-8 PLATE DR., EAST DUNDEE, IL 60118 U.S.A.
PH: 1-847-428-9494 FAX: 1-847-428-7744
www.PEInfo.com
Copyright 2022

PE_dwg_name: 17E109.22_2023.01.27

File name: 17E109.22_2023.02.01.sch

Sheet name: RESET_CIRCUIT

Size: C

Sheet: 17of 18

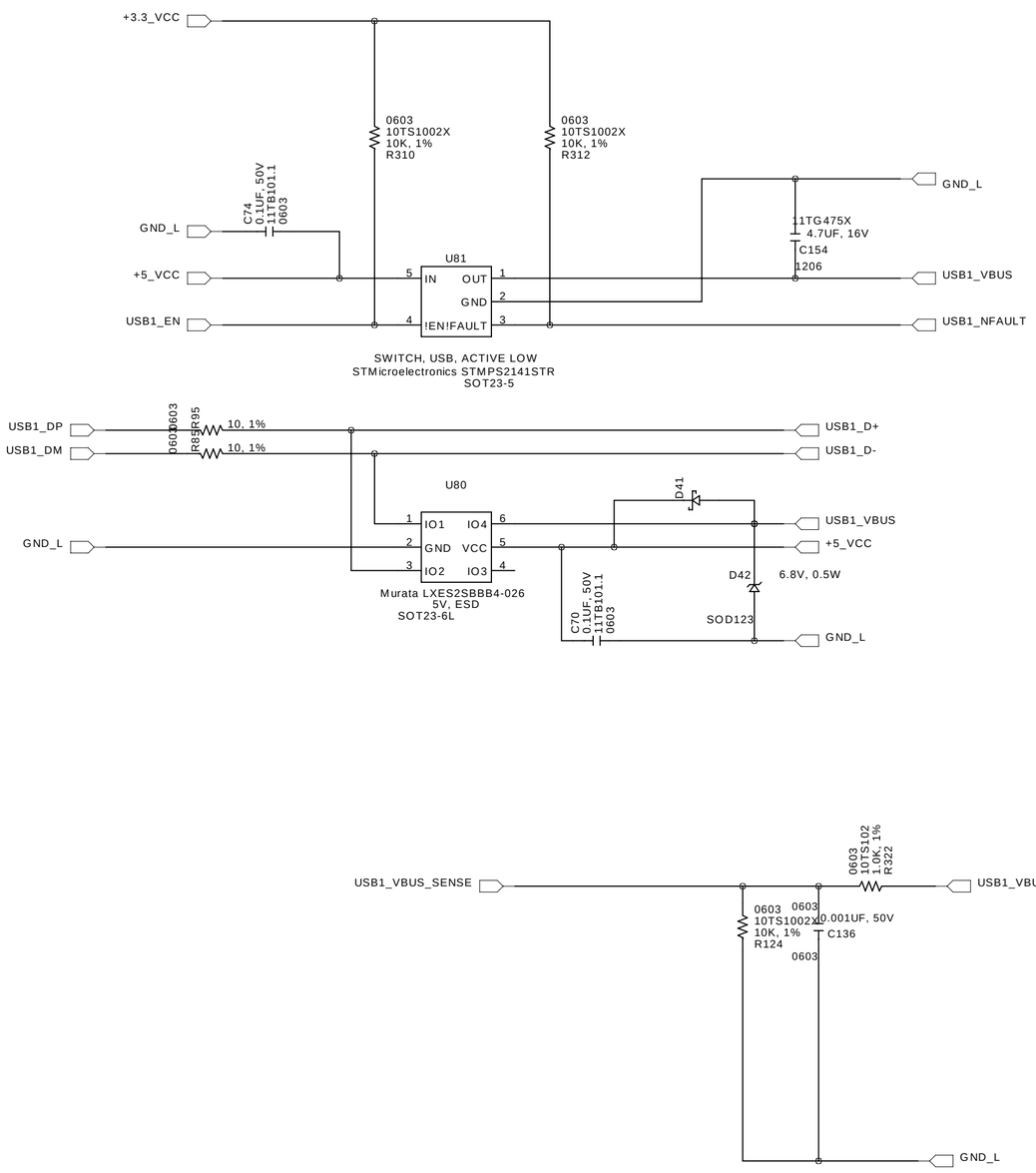

Power Electronics International, Inc.
561-8 PLATE DR., EAST DUNDEE, IL 60118 U.S.A.
PH: 1-847-428-9494 FAX: 1-847-428-7744
www.PEInfo.com
Copyright 2022

PE_dwg_name: 17E109.22_2023.01.27
File name: 17E109.22_2023.02.01.sch
Sheet name: USB
Size: C